Rhode Island
Department of Environmental Management

Guidelines for the Design and Use of Pressurized Drainfields

Month Year

TABLE OF CONTENTS

1.0 INTRODUCTION 4

1.1 Coverage of Guidance Document 5

1.2 COMMON DESIGN PARAMETERS FOR ALL PRESSURIZED DRAINFIELDS 5

1.3 COMMON COMPONENTS FOR ALL PRESSURIZED DRAINFIELDS 7
- 1.3.1 Dosing tank Specifications 8
- 1.3.2 Pump, Discharge Assembly and Transport Line Specifications 9
- 1.3.3 Programmable Timer, Controls and Control Panels 10

1.4 COMMON FINAL INSTALLATION STEPS FOR ALL PRESSURIZED DRAINFIELDS ..... 11~~12~~12~~11~~

2.0 ADVANCED PRESSURE DRAINFIELDS (APDs) 12

2.01 PROTECTING THE APD FROM DAMAGE 12

2.02 APD COMMON DESIGN PARAMETERS ..... 12~~13~~13~~12~~
- 2.02.1 APD hydraulic loading rates 13
- 2.02.2 Flow Differential Between the First and Last Orifice in APD Laterals 13
- 2.02.3 Maximum Volume per Orifice per Dose 13

Table 1. Hydraulic loading rates for Advanced Pressure Drainfields 14

2.1 BOTTOMLESS SAND FILTERS 15
- 2.1.1 Treatment Process Summary 15
- 2.1.2 Siting guidelines for BSFs 15
- 2.1.3 BSF design guidelines ..... 15~~16~~
- 2.1.4 BSF Precautionary Notes 17
- 2.1.5 Additional components of the BSF 17
- 2.1.6 BSF Installation Specifications 19

2.2 PRESSURIZED SHALLOW NARROW DRAINFIELD 21
- 2.2.1 Treatment Process Summary 21
- 2.2.2 Siting Guidelines for PSNDs 21
- 2.2.3 PSND Design Guidelines 22
- 2.2.4 Additional Components of the PSND 23
- 2.2.5 PSND Installation Specifications 24

3.0 LOW PRESSURE PIPE (LPP) 25
- 3.1 Treatment Process Summary ..... 25~~26~~26~~25~~
- 3.2 Siting guidelines for LPPs 26
- 3.3 LPP design guidelines ..... 26~~27~~27~~26~~
- 3.4 Components of the LPP 27
- 3.5 LPP Installation and maintenance specifications ..... 28~~29~~29~~28~~

4.0 O&M REQUIREMENTS FOR ALL PRESSURIZED DRAINFIELDS 29
- 4.1 Alarms 29
- 4.2 Site Visits ..... 29~~30~~30~~29~~
- 4.3 Routine Periodic Maintenance 30

GLOSSARY 33

ACKNOWLEDGEMENTS 35

REFERENCE MATERIALS 37
APPENDIX:

FIGURE 1: CATEGORY 1 TECHNOLOGY AND PRESSURIZED DRAINFIELD SCHEMATIC 39
FIGURE 2: CATEGORY 2 TECHNOLOGY AND PRESSURIZED DRAINFIELD SCHEMATIC 39
FIGURE 3: DEMAND DOSING TANK W/ CENTRIFUGAL PUMP 39
FIGURE 4: DEMAND DOSING TANK W/ MULTI-STAGE CENTRIFUGAL PUMP 40
FIGURE 5: TIMED-DOSING TANK W/CENTRIFUGAL PUMP AND IN-LINE SCREEN .. 40
FIGURE 6: TIMED-DOSING TANK W/CENTRIFUGAL PUMP AND BASKET SCREEN . 41
FIGURE 7: TIMED-DOSING TANK W/SCREENED VAULT AND MULTI-STAGE CENTRIFUGAL PUMP 41
FIGURE 8: ABOVE-GROUND BOTTOMLESS SAND FILTER (SIDE VIEW) 41
FIGURE 9: IN-GROUND BOTTOMLESS SAND FILTER (SIDE VIEW) 42
FIGURE 10: TYPICAL BOTTOMLESS SAND FILTER (TOP VIEW) 42
FIGURE 11: SIDE VIEW DETAIL – TYPICAL BOTTOMLESS SAND FILTER 43
FIGURE 12: ORIFICE SHIELD DETAIL 43
FIGURE 13: BSF FLUSHING VALVE CHOICE DETAIL 43
FIGURE 14: BSF SAND MEDIA SPECIFICATIONS 44
FIGURE 15: PSND CROSS SECTION DETAIL 45
FIGURE 16: PSND CROSS SECTION DETAIL (LONG SIDE) WITH DETAIL 46

Guidelines for the Design and Use of Pressurized Drainfields

PREFACE

The purpose of this document is to provide guidelines for the design, review, installation, and operation and maintenance of pressurized drainfields used for dispersal and treatment of residential strength septic tank effluent or advanced treated wastewater. This document uses various terms to describe the *level of importance* of different design criteria. The terms used are:

1. May: Optional, but consider these criteria.
2. Should: Optional, but a well-accepted practice and a wise or advisable choice.
3. Must or shall: Not optional. The wastewater field's present state of knowledge mandates use as described.

A glossary of wastewater terms is included to help familiarize the reader with new terminology. Figures referenced in the text are located in Appendix A of this document. These guidelines are not intended to be an all-encompassing design or installation procedure for pressurized drainfields. They are intended to provide general information to the designer, installer and maintenance provider concerning the different types of pressurized drainfields.

1.0 INTRODUCTION

There have been previous guidelines that describe the design and use of pressurized drainfields in Rhode Island. First in historical appearance is the pressurized shallow narrow drainfield guide that is contained within the "Guidelines for the Design and Use of Sand Filters in Critical Resource Areas" (1999). Second is the "Guidance for the Design and Use of Bottomless Sand Filters" (2001). Both guidance documents have undergone several updates in the form of addendum sheets that have addressed cold weather concerns and other design and installation requirements that were learned from experience.

The partial intent of this guidance document is to incorporate all of these addendums as well as new requirements for pressurized shallow narrow drainfields (PSND) and bottomless sand filters (BSF) under one document. In addition, this guidance document includes the design and use of low pressure pipe (LPP) to distribute effluent from either septic tanks or advanced treatment technologies to leachfields as defined in the current RIDEM-OWTS (Department) "Rules Establishing Minimum Standards Relating to Location, Design, Construction and Maintenance of Onsite Wastewater Treatment Systems".

1.1 Coverage of Guidance Document

This guidance document is intended for the design of pressurized drainfields as options for new systems and repairs. All pressurized drainfields shall include timed-dosing, with the use of a control panel containing elapsed time meters and cycle counters for the pump(s) and alarm(s).

For the purpose of separating LPP from pressure distribution drainfields that provide additional polishing of highly treated effluent, we will divide pressure distribution drainfields into: low pressure pipe (LPP) and advanced pressure drainfields (APDs). APDs include bottomless sand filters and pressurized shallow narrow drainfields.

This document does not include guidance for drip irrigation drainfields. However, there are approved technologies and representative vendors that can provide design, installation and use requirements for approved drip irrigation technologies.

Types of Pressurized Drainfields

1.2 GENERAL DESIGN PARAMETERS FOR ALL PRESSURIZED DRAINFIELDS

The following parameters apply to all BSF, PSND and LPP designs:

(a) Setback to structures impeding groundwater flow: the interior face of any structural or landscape retaining wall that may interfere with ground water flow, down-gradient from the pressurized drainfield, must be located at least 25 feet from the pressurized drainfield.

(b) Setback to foundation and tanks: The minimum setback distance from the pressurized drainfield to any foundation shall be eight (8) feet, provided that the elevation of the basement slab in the dwelling is above the design seasonal high groundwater table (SHWT) depth and that there are no drains associated with the foundation. The minimum setback distance from the pressurized drainfield to any tank equal or larger than 1000 gallon capacity shall be eight (8) feet.

(c) All setbacks and all other regulatory requirements contained in the Department Rules, that are not mentioned in this guideline, shall be met.

(d) Designs greater than 900 gpd: where design flows exceed 900 gpd, the Department may require additional technical studies to ensure that the soil will accept and transmit effluent at the proposed loading rate without: excessive mounding of ground water; seepage outbreak, such as at nearby cut slopes, toe slopes or property boundaries; adverse effects on the operation of the pressurized drainfield; or adverse effects on nearby ground water and surface water resources. The Department shall reserve the right to require additional supporting engineering calculations for the use of pressurized drainfields on design flows greater than 2000 gpd. The Department may require increased setbacks depending on the site specific conditions. In addition, commercial systems with high strength waste shall incorporate added treatment components to ensure treatment limits herein for BOD_5, TSS and FOG are achieved prior to using a pressurized drainfield.

(e) Pressurized drainfields must be designed by a Class II or III Licensed OWTS Designer unless the Department determines otherwise. No designer or installer shall undertake the design or installation of a pressurized drainfield pursuant to regulations unless he/she has received appropriate training by a vendor, professional organization, or institution recognized by the Department for this purpose. Any licensed designer or installer must document to the Department that applicable training has been completed.

(f) Residual head: designs should account for a minimum of two (2) feet of head (pressure) at the distal end of each distribution lateral.

(g) Design maintenance notes: designers should provide adequate notes on their plans to facilitate proper maintenance of all system components.

(h) Drainfields at different elevations and zoned drainfields: site conditions may not facilitate installing drainfield trenches or zones at the same elevation. In these situations, gate valves can be used to provide uniform wastewater distribution. Alternately, orifice plates may be used to help equalize flow to trenches that are not at the same elevation. Ball valves shall not be considered a suitable means for flow control. Access ports must be installed at the locations of all valves, lateral ends and orifice plates. Careful

attention should be given to drainback when placing trenches or zones at different elevations since uneven drainback may overload zones or trenches. Types of drainfields that can be placed at different elevations shall conform with the Rules.

(i) Sequencing valves: smaller sized pumps can be used on larger drainfields and still maintain the required minimum distal head pressure by utilizing automatic sequencing valves and dividing the total number of orifices into "zones". These valves automatically direct flow to two or more final treatment and dispersal components (zones), one or more at a time, and in a prescribed order to sequentially redirect flow to separate zones within the drainfield. Access ports or manholes shall be required for sequencing valves and shall be sufficiently sized to facilitate maintenance.

(j) Stormwater: all runoff shall be directed away from the area of the drainfield

1.3 COMMON COMPONENTS FOR ALL PRESSURIZED DRAINFIELDS

All pressurized drainfields submitted under this guidance shall be **pressure dosed utilizing programmable timers**. Intermittently pressure dosed effluent provides uniform distribution of wastewater over the infiltrative surface, minimizing the chance of localized saturation. In addition, small incremental wastewater applications promote better wastewater treatment than a few large doses. Use of a programmable timer enables flow equalization within the treatment train, where peak flows can be stored in tanks and timed-dosed to the pressurized drainfield infiltrative surface over a 24-hour clock cycle.

For purposes of this document, all **advanced treatment units** specified to precede pressurized drainfields, must fall within one of the following categories:

Category 1 technologies: Advanced treatment units that are **timed-dosed** and have been classified by the Department as meeting effluent standards less than or equal to 20 mg/L for both BOD_5 and TSS; and FOG of less than or equal to 5 mg/L (see Figure 1).

Category 2 technologies: Advanced treatment units that are **not timed-dosed** and have been classified by the Department to at least meet effluent standards of 30 mg/L for both BOD_5 and TSS; and FOG of less than or equal to 5 mg/L (see Figure 2).

When a treatment train utilizes an advanced treatment unit that is timed-dosed (i.e. a Category 1 technology) this timer alone will indirectly control the pump applying effluent to the pressurized drainfield in a timed-dosed fashion. In this case, a second timer for the pressurized drainfield pump is not required, and effluent may be demand dosed from the pressurized drainfield dosing tank since forward flow of wastewater will have been timed-dosed earlier in the treatment train.

1.3.1 Dosing Tank Specifications

(a) A dosing tank must be provided following the advanced treatment step to provide wastewater storage and to house the pump discharge assembly. All dosing tanks used in a pressurized drainfield system must be watertight, otherwise the system will not function properly. Leaks will allow stormwater and ground water to infiltrate into the tank and be pumped onto the drainfields, subsequently overloading them. Similarly, under deep ground water conditions, wastewater leaking out of a tank will not be dosed to the pressurized drainfield and treatment will be short-circuited. All inlet and outlet pipes to concrete dosing tanks shall have flexible rubber seals secured by stainless steel bands. Watertight rubber grommets must be used at inlet and outlet pipes to plastic or fiberglass dosing tanks as well as on plastic manhole risers attached to concrete tanks.

(b) Category 1 technology dosing tanks shall provide storage volume at least equal to the design volume dosed onto the pressurized drainfield during one pump run time. This dosing tank may be operating on a demand basis since the timer in the Category 1 technology is providing timed-dosed effluent as forward flow. See Figure 3 and 4.

(c) A **storage capacity** must be provided in pressurized drainfield dosing tanks that follow systems producing socially dosed effluent (not timed-dosed, i.e. Category 2 technologies or septic tank effluent) to accommodate routine hydraulic surge storage, power outages and/or service periods. The surge storage capacity shall be positioned between the elevation of the timer operating control switch and the high water alarm/peak enable control switch. The high water alarm shall be placed a minimum of 2 inches below the invert of the inlet to the tank. Emergency storage may be included in the tank, between the high water alarm and the invert of the inlet to the tank .

Dosing tanks following treatment units that are not timed-dosed shall be a minimum of 450 gallons. For single family residential designs the required surge storage shall be 75 gallons per bedroom; for other designs the surge storage shall be calculated, at minimum, 50% of the daily design flow. See Figures 5, 6 and 7.

(d) The pump servicing the pressurized drainfield shall be submerged completely at all times. This will enable proper pump cooling, decrease corrosion problems and prolong pump life.

(e) In situations where pressurized drainfields are being designed for seasonally-used vacation homes and summer rental homes, where daily design flows may often be exceeded, it is strongly recommended that primary tank and dosing tank capacities be increased by a minimum of thirty (30) percent and allow for increased surge storage of the timed-dosed component.

(f) All manhole risers in the tanks/chambers serving the pressurized drainfield shall be watertight, and installed to finish grade with secure lids, in accordance with the Rules..

1.3.2 Pump, Discharge Assembly and Transport Line Specifications

(a) Pressure requirements: pumps should be sized to provide a minimum of two (2) feet of head (i.e. pressure) at the distal end of each distribution lateral in the pressurized drainfield. Consider also having less than 7 feet of residual head to avoid loud hissing when the system is pressurized. Most service providers do not have instruments that measure more than 8 feet of residual head in the field. Most pump manufacturers will provide pump calculations for individual designs and requirements.

(b) Electric / wiring requirements: pumps dosing pressurized drainfields following a non timed-dosed system shall be wired on the same electrical circuit as the advanced treatment unit.

(c) Discharge assembly: The discharge assembly in the dosing tank shall be provided with a check valve; a mechanical disconnect from the pump to the discharge assembly, reachable within 12 inches of the finish grade; and a valve to hydraulically separate the chamber from the pressurized drainfield. If the transport pipe needs to be drained after each pump event, a weep hole (3/16") shall be placed in a location within the discharge assembly that allows for drainback. Spray from the weep hole shall be directed away from sensors and controls (floats, transducers, etc.).

(d) Anti-siphon devices and check valves: If the transport pipe slopes towards a pressurized drainfield having distribution piping at a lower elevation than the maximum water level in the dosing tank, an anti-siphon device should be used on the pump discharge assembly, or at the highest point in the piping system from the tank to the distribution piping, to prevent siphoning.

Check valves, anti-siphon devices and traps in the transport lines may prevent proper draining. If such a device is required, care must be taken so that the lines will drain positively. Shallow transport lines (above frost depth) shall drain after each dose or be insulated. If site conditions do not allow a transport line to drain, then a 2-foot minimum burial is required and a 2" minimum thick by 24" wide expanded rigid polystyrene plastic insulation must be placed above the pipe. Insulation may not be necessary if piping is installed below the frost depth.

(e) Pump screen: all pumps following Category 2 technologies must have either a screened vault/basket or an in-line effluent filter. All pumps following a septic tank shall have an effluent screen. Figures 5, 6 and 7 illustrate different methods to incorporate an effluent screen in such tanks.

(f) Piping and fittings: all piping from the pump flange to the distal end of the drainfield lateral shall be pressure rated schedule (SCH) 40 polyvinyl chloride (PVC) or equivalent.

(g) Transport lines: the effluent transport line from the pump to the pressurized drainfield is typically a 1.25 to 2 inch SCH 40 PVC pipe (or equivalent). The actual size

will depend upon such factors as flow, effluent type (septic tank or advance treatment), distance, static head, friction loss, and desired pressure at distal orifices.

In order to prevent sagging of the transport line during installation, the transport line should be placed in an undisturbed trench bottom (do not over dig). This will prevent sagging after backfilling due to settling and prevent freezing of effluent that remains in sags in the line. If trench bottom is over dug, then a layer of 1" minimum gravel shall be placed on the unidsturbed trench bottom to bring it to specified grade.

(h) Transport lines above the frost depth: the transport line should be sloped either back to the dosing tank or to the pressurized drainfield to clear the line after each dose to prevent freezing in cold weather, or be insulated as described in (d) above. Maximizing transport line slope will lower the risks of freezing problems. Keeping the dosing tank as close to the pressurized drainfield as possible can also minimize risks of transport line freezing.

(i) Velocities within pipes: liquids shall flow at a minimum velocity of 2 feet per second and a maximum of 8 feet per second. These apply for discharge assemblies, transport pipes, manifolds and laterals. Small lateral and orifice sizes are recommended to provide the highest possible scouring velocity in the laterals, thereby minimizing orifice clogging, and providing as even distribution of wastewater as possible.

1.3.3 Programmable Timer, Controls and Control Panels

(a) Timer settings: the timer shall be programmed to provide several small doses of wastewater to the pressurized drainfield throughout a 24-hour clock time period.

i. The system design shall be based upon a minimum of 1 and a maximum of 2 doses per hour (24 to 48 times in 24-hours).
ii. The designer shall insure that the timer is field-set at the time of system start up.
iii. Two to four weeks after sufficient use of the system, the service provider shall ensure that the timer is reset, as needed, based upon actual flow through the system. Depending upon the actual flow to the system at that time, and adherence to the maximum gallons per orifice per dose restrictions, as few as 10 doses per day may be adequate to disperse flow to the pressurized drainfield.
iv. Timer settings shall be checked at every established maintenance and inspection visit and when home occupancy changes and adjusted as needed.

(b) Controls: controls shall be in the form of signal rated floats, pressure transducers or other methods approved by the Department. A high water alarm and pump controls shall be included. A peak enable control shall be included either as part of the timed-dosed pretreatment system (Category 1 technology) or as part of the dosing tank for the pressurized drainfield served by a non timed-dosed pretreatment system or septic tank.

The peak enable control shall engage the programmable timer into the peak enable mode in the event of timer malfunctions or temporary excessive water use. The peak enable mode in dosing tanks for the pressurized drainfield served by a non timed-dosed pretreatment system shall cut the "off" time of the pump to half its original setting to catch-up with excessive temporary flow. The pump "on" time shall stay the same during the peak enable mode to minimize saturated conditions in the drainfield.

A low water/redundant off control is required for pump tank using timed dosed effluent to a pressurized drainfield (following Category 2 technologies or LPP receiving septic tank effluent). Otherwise a low water/redundant off is recommended.

(c) Control panel: The control panel box must be placed outside on a suitable pedestal near the structure that it serves. Alternatively the panel box may be mounted on an outside wall of the structure (preferably a utility room, and not a bedroom or living room, as motor contactors in the panel emit a noticeable clunking sound). Exterior panel placement enables the system to be serviced at any time, eliminating the need to access the inside of the building. It is strongly recommended that the panel box also be within view of the system location to help facilitate operation and maintenance and placed at a comfortable height for access.

The control panel must, at minimum, meet the requirements for the NEMA 4X specifications (NEMA: National Electrical Manufacturers Association). The electrical conduit to and from the control panel must have NEMA approved expansion fittings for polyvinyl chloride (PVC) rigid conduit and must also have appropriate seals to prevent gases from wastewater components from reaching the control panel.All penetrations in the enclosure shall be sealed with fittings that maintain the rating of the enclosure. Conduit shall be appropriately sealed to prevent the migration of wastewater gases into the control panel.

The control panel shall include a pump elapsed time meter ((ETM) to record total pump run time) and cycle event counters ((CC) recording events for each pump, peak enable counter, and alarm event). The ETM and CC shall be non-resettable.

The control panel must have an HOA "hand, off and automatic" switch for each pump. The "hand" mode is used to manually turn the pump on, "off" is to turn the pump off indefinitely, and "automatic" means the timer has control of the pump operation. The control panel must also have circuit breakers for both the main circuitry and the pump circuitry.

1.4 COMMON FINAL INSTALLATION STEPS FOR ALL PRESSURIZED DRAINFIELDS

(a) Head requirements: immediately after any pressurized drainfield has been installed, the head or "squirt height" of the distribution laterals needs to be determined, recorded

in the maintenance record and left on site (usually in the system control panel box). Measuring the head is done by opening the lateral distal ball valve or unscrewing a threaded end adaptor and attaching a clear graduated PVC head measuring pipe. The pump is turned on and liquid height in the pipe is measure and recorded. This measurement should be consistent for each lateral in the system. When using a measuring tape to determine the distal head on the clear PVC pipe, the measurement shall begin at the invert of the lateral.

(b) Trees and shrubs: trees and woody shrubs shall be kept a minimum distance of ten (10) feet from the pressurized drainfield. Roots from nearby moisture-loving trees such as willows, black locust, red maple, and others may cause problems with roots clogging drainfield lateral orifices or interfering with the soil infiltrative surface. Greater setback distances are recommended from these tree species.

2.0 ADVANCED PRESSURE DRAINFIELDS (APDs)

An advanced pressure drainfield must not be used without an advanced treatment unit(s) that has been approved by the Department to meet either Category 1 or Category 2 technology designations (see Section 1.3). **A APD shall not be used with septic tank effluent.** APDs include bottomless sand filters (BSFs) and pressurized shallow narrow drainfields (PSNDs).

Hydraulic loading rates to APDs vary depending upon the level and reliability of treatment occurring in the preceding advanced treatment unit. For instance, loading rates are higher for APDs that follow timed-dosed treatment units, resulting in smaller APD footprints.

2.01 PROTECTING THE APD FROM DAMAGE

The landscape over and immediately adjacent to any APD system should be protected from heavy vehicle traffic and excessive weight loads, before, during and post-construction. It is highly recommended that the proposed or potential APD location be staked and flagged or fenced when the site evaluation is performed in order to prevent encroachment during construction. **Vehicular traffic over the APD area will compact soil and limit the ability to move effluent into native soil and away from the APD footprint, thus rendering the area unsuitable.** If vehicle encroachment is suspected to be a problem after construction, some structure such as garden timbers, boulders, bollard poles, fences, or walls should be used to protect the APD area.

2.02 APD COMMON DESIGN PARAMETERS

2.02.1 APD hydraulic loading rates

Sizing of the APD is based on soil texture, structure and consistence of the most restrictive horizon within 1.5 feet below the proposed base of the APD (Table 1). Where a soil evaluation by a Class IV Soil Evaluator has not been performed, the designer may have an analysis of these soil characteristics performed that are sufficient for the Department to make a determination on APD sizing. Soil textures are defined in the glossary.

These loading rates are for any APD receiving residential strength wastewater that has undergone treatment by an advanced treatment system as defined in Section 2.0 above. The loading rates in Table 1 are for design bedroom flows of 115 gal/bedroom/day. **Other jurisdictions, other than the State of Rhode Island, with different design bedroom flows should convert these loadings to their own bedroom design flow**. For example, a bedroom design flow of 150 gal/bedroom/day would have much larger APD than intended when using the numbers below. However, bedroom design flows that are less than 115 gal/bedroom/day would have APDs that are smaller than intended by these guidelines and may not be adequate to handle the hydraulic flows.

2.02.2 Flow Differential Between the First and Last Orifice in APD Laterals

The maximum head differential between the first and last orifice on each APD lateral shall be no greater than 10%.

2.02.3 Maximum Volume per Orifice per Dose

All APDs covered by this document shall be dosed up to a **maximum** of 0.25 gallons per orifice per dose. Pump manufacturers will usually help provide pump calculations to assist with this design requirement.

Table 1. Hydraulic loading rates for Advanced pressure Drainfields.

Soil Category	Soil Texture	Soil Structure	Soil Consistence In-Hand Using Soil Clods	Excavation Difficulty	Category 1 Technologies Loading Rate (gal/ft^2/day)	Category 2 Technologies Loading Rate (gal/ft^2/day)
1	cos, s, lcos, ls, cosl, fs	structureless-single grain or subangular blocky	loose friable	none	2.3	1.5
2	vfs, lvfs	structureless-single grain	loose	none	2.7	1.9
3	ls, sl, l	granular, subangular blocky	very friable to friable	low	3.5	2.3
4	lfs, lvfs, fsl, vfs	granular, subangular blocky	very friable to friable	low	3.1	2.0
5	sil, si, vfsl	subangular blocky	very friable to friable	low	2.7	1.9
6	lcos, cosl, lfs, ls, sl, l,	structureless massive	very friable to friable	low	2.3	1.5
7	fsl, vfsl, sil, si, vfs	structureless-massive	very friable to friable	low to moderate	2.1	1.5
8	all textures	structureless-massive	firm to very firm	moderate	1.9	1.3
9	all textures	platy or structureless-massive	firm to very firm	high	1.5	1.0
10	all textures	platy or structureless-massive	extremely firm	very high to extremely high	Not Allowed	Not Allowed

Category 1 technologies = Any advanced treatment unit that is timed-dosed according to the specifications of this guide and has been designated by the Department as meeting treatment standards of less than or equal to 20 mg/L for both BOD and TSS and FOG of less than or equal to 5 mg/L.
Category 2 technologies = any advanced treatment unit that is not timed-dosed according to the specifications of this guide and has been designated by the Department as meeting treatment standards of 30 mg/L or less for both BOD and TSS and FOG of less than or equal to 5 mg/L. Timed-dosing and an in-line screen filter or a screened pump vault must be used on the pump dosing the APD.
Notes:
1. Soil textures are defined in the glossary.
2. Loading rates shall be based on 115 gallons/bedroom and upon texture, structure, and consistence of the most restrictive horizon within 1.5 feet below the proposed base of the APD. Please see figures 8, 9, 11, 15 and 16.
3. PSNDs placed in cos, vcos, gravelly or very gravelly soils shall have a leveled-off 6-inch ASTM C-33 sand layer.

2.1 BOTTOMLESS SAND FILTERS

2.1.1 BSF Treatment Process Summary

Wastewater, having received secondary or better treatment in advanced treatment unit(s), is intermittently pressure dosed using a programmable timer to the bottomless sand filter (BSF). The BSF consists of a rectangular shaped component that holds the treatment media, a network of distribution pipes and topped with pea stone or crushed stone. Wastewater is dispersed over the BSF surface in the PVC pipe distribution network, which is surrounded in the pea stone or crushed stone. Wastewater trickles down in unsaturated thin film-flow through the sand media, where physical and biological treatment occurs. The small sand media particle size promotes physical sedimentation processes and some removal of pathogenic organisms. The BSF effluent infiltrates into the underlying native soil, where it may receive additional treatment as it percolates down through unsaturated soil in the vadose zone, before entering the ground water.

2.1.2 Siting guidelines for BSFs

BSFs should be used as a final drainfield option when site characteristics and space constraints are such that pressurized shallow narrow drainfields (PSNDs), low pressure pipe (LPP) or conventional gravity-fed trenches require filling, inverts are above existing grade, shallow water table or restrictive layers prevail, or other restrictive site conditions exist. Using a bottomless sand filter often will eliminate the need for excess fill required of other drainfield options. BSFs can cut into a mildly sloping site to provide an aesthetically acceptable appearance.

Due to their smaller size, BSFs have an advantage over other drainfield options in areas with small lots, where the seasonal high water table is less than 24”, or where any impervious material is found at less than 60" from the original ground surface.

In addition, BSFs may achieve 1 to 2 log reduction (i.e. orders of magnitude reduction) in Fecal coliform and may be considered for use in areas where additional removal of pathogenic organisms is desired. Applicable locations for BSFs are: drinking water reservoir watersheds, pathogen sensitive poorly-flushed coastal ponds, shallow water table soil locations, densely populated welled areas, sites in close proximity to shell fishing grounds, and areas where recreational water contact issues are a concern. To maximize pathogen removal in these areas, BSFs should be constructed above-grade in a location where only the grass thatch layer and/or organic matter/soil horizon has been removed. Native A and B mineral soil horizons, when left in place and undisturbed below the base of the BSF, can help provide additional pathogen removal (See Figure 8).

2.1.3 BSF design guidelines

All BSFs shall conform to section 1.2 "Common design parameters for all pressurized drainfields".

(a) Vertical separation distances: all vertical separation distances defined in the Department's Rules must be met when using a BSF. The vertical separation distance shall be measured from the pea stone-sand interface below the PVC distribution manifold, to the seasonable high water table (SHWT) or to the impervious layer as defined by the Department. (See Figures 8 and 9).

The required separation distance to the SHWT shall be measured from twenty-four inches (24") above the base of the BSF (the minimum depth of sand media).

(b) Hydraulic loading rates: hydraulic loading rates for BSFs will be based on the native receiving soil characteristics and the quality of wastewater being discharged by the preceding secondary treatment unit. These rates are provided in Table 1.

(c) Location of BSF: if possible, the BSF should be located to receive the maximum direct sunlight in the parcel of lot it occupies. Also, it is recommended that the BSF be located in a portion of the home landscape that is shielded from high winds. These two recommendations will minimize the risk of freezing in very cold weather.

(d) Shape and geometry: to reduce the possibility of ground water mounding problems, it is recommended that the **length to width ratio of any BSF be larger than 2:1,** this is especially important on larger BSFs. (The BSF distribution manifold should run the width of the BSF, whereas, the laterals should run the long-axis of the BSF). Also, an attempt should be made to position BSFs, lengthwise along the existing site contours rather than across the contours (see Figure 10). Cross bracing may be used to ensure structural integrity of filter enclosures.

(e) Finished grade: Finished grade around any BSF shall be a minimum of 6" below the top of the enclosure to prevent surface water from flowing onto the filter. One layer of secured pressure treated timbers with minimum nominal dimensions of 6" x 6", (or other suitable structural support) shall be placed around the top perimeter to emphasize the filter's location so that accidental vehicle movement over the filter can be prevented. Additional timbers should **not** be placed below grade since they will rot over time and leave a void that could result in soil slumping or preferential flow of rainwater around the BSF (See Figures 8 and 9). The timber structure should be secured in a manner that is structurally sound and prevents movement of timbers.

(f) Fill perimeter: the land surface elevation 2 feet below the pea stone-sand media interface shall be maintained for a distance of at least 5 feet from the edge of the BSF. Land surface re-grading adjoining this 5-foot perimeter must maintain a minimum of 3:1 (run:rise) slope down gradient (see Figure 8).

2.1.4 BSF Precautionary Notes

(a) BSF protection: the proposed BSF location shall be staked out and protected prior to any site preparation activities. The design plan should clearly indicate to the installer or site developer the need to protect the BSF area prior to any construction on the site.

Under no circumstances should heavy equipment, vehicles, or impermeable surfaces/materials be allowed over a finished BSF. At a minimum, this would result in poor treatment and more likely system failure, broken components, and financial expense to the homeowner.

(b) Children or other unauthorized access safety: in areas where the BSF may be accessible to children, a broad weave, 0.25" mesh or greater, plastic fabric may be embedded within the stone cover of the BSF to prevent unauthorized access to laterals.

(c) Setbacks to trees/shrubs: a minimum buffer of ten (10) feet shall be maintained between BSFs and neighboring trees and shrubs. The root systems of water-loving trees and shrubs can cause damage to BSFs and should be kept farther away. Where the 10-foot buffer cannot be maintained, a root barrier fabric (available through a wholesale plant nursery company) shall be placed between the trees/shrubs and the filter.

2.1.5 Additional components of the BSF

Bottomless sand filters shall also conform to the components in Section 1.3 of this guidance: “Common components for all pressurized drainfields”.

2.1.5.1 BSF Enclosures (see Figure 11)

(a) The walls of BSFs must be lined with a 30 mil flexible PVC liner with all boots, patches, repairs, and seams having the same physical properties as the liner material.

(b) Any penetration through the PVC liner wall shall be done with a PVC boot attachment glued to the liner with the appropriate resilient sealer.

(c) Support walls are needed to prevent caving of the filter walls during construction. These walls shall be rigid and made of sacrificial plywood or particle board (or equivalent; plywood is intended to decompose over time) and supported by at least one row of 6 x 6 pressure treated timbers (or equivalent) above the finish grade.

(d) A permanent top frame structure (such as pressure treated 6 x 6 timbers, or other suitable structural support) must be provided on any portion of a BSF that is installed above grade. The perimeter of the BSF, below the required minimal structural support, may be bermed with native soil or other material such as landscape stone or other non-degrading material. **Below grade use of timbers is prohibited to prevent soil**

slumping after timbers have rotted and to spare the homeowner additional expense.
In areas prone to wave action due to flooding a concrete structure may be considered by the designer to minimize damage to BSF.

(e) Stainless steel or galvanized rods may be used for cross bracing inside the BSF to minimize bowing of the sides of the structure. The nuts holding the rods in place shall be recessed into the BSF exterior structure to minimize risks of injury from sharp edges.

2.1.5.2 Bottomless Sand Filter Media Specifications

(a) BSF media: BSF filter media specifications are presented in Figure 14. All media within the enclosure and below the pea stone shall have an effective size (D_{10}) of 0.33 mm (+/-) and uniformity coefficient (D_{60}/D_{10}) of 3.0 to 4.0. The maximum allowable percentage of fines passing through a Number 200 sieve shall be 1%. In addition, other ASTM C-33 sand specifications shall be met.

(b) Sand quality **- It is important to remember that using good quality sand media is essential. Not all sand and gravel operations will have the ability to produce sand with the above specifications.** A sieve analysis of the sand media to be used should be conducted to assure that its effective size and uniformity coefficient are appropriate. When sampling the stock piled sand media, samples should be taken from several locations within the pile to assure a representative sample for analysis. A recent sieve analysis produced by the sand manufacturer is satisfactory as long it adheres to these requirements. The installer should secure a copy of this for filing purposes. Older sieve analyses may not accurately reflect the specifications of the existing sand stockpiled at a manufacturer's facility. The standard method to be used for performing particle size analysis should comply with one of the following:

1. The sieve method specified in ASTM D-136 and ASTM C-117.
2. The method specified in Soil Survey Laboratory Methods and Procedures for Collecting Soil Samples, Soil Survey Investigation Report #1, U.S. Department of Agriculture, (2004 or later edition).

2.1.5.3 BSF distribution laterals

(a) General: influent applied to a BSF shall be distributed over the sand surface using small diameter, pressure rated SCH 40 PVC pipe. The distribution manifold will typically be 1 to 1.25 inch in diameter and the distribution laterals usually will be 0.75 to 1 inch in diameter. Size will vary depending on design and site conditions.

(b) Orifices: a series of 1/8 inch diameter holes (orifices) shall be drilled in the distribution laterals and spaced no less than 14 inches and no more than 24 inches apart. Two (2) orifices in each lateral shall be drilled pointing up (12 o'clock position) and be located approximately 1/3 and 2/3, respectively, along the length of each lateral. All other orifices shall be drilled pointing down (6 o'clock position). Orifice shields shall be

placed over each orifice (above or below the lateral, as required). Orifice shields placed below any orifice shall contain slots or holes to provide free draining (usually referred to as cold weather orifice shields, see Figure 12).

(c) Laterals: laterals shall be spaced between 14 inches and 24 inches on center and shall be no longer than 50 feet.

(d) Lateral ends: the distal end of each BSF lateral shall be fitted with a 45 degree elbow and closed off with either a ball valve or a threaded end and cap (See Figure 13).

(e) Orifice square grid and space to liner: lateral spacing and orifice spacing should be somewhat square (i.e.: 18" and 16"). The space from the ends of the laterals to the liner shall be close to half the orifice spacing and be able to accommodate the fittings (i.e.: 45 degree elbow, threaded end adapter and cap) and have sufficient space for maintenance activities. The end laterals on the manifold should have a spacing to the liner that is about half the lateral spacing. See Figure 10.

2.1.5.4 BSF inspection well: one inspection well shall be installed in the approximate center of the filter and extend down to the sand and native soil interface (See Figure 8, 9 and 10). Larger zoned BSFs shall have at least one inspection well per zone. The inspection well should be made of 4-inch diameter perforated or slotted PVC pipe (SDR 35 minimum) wrapped in filter fabric and topped with a removable cap positioned slightly below the finished elevation of the cover stone.

2.1.5.5 BSF cover stone: a 3/8" round or sub-rounded (pea stone), non-shale or other soft stone, screened or crushed, double washed, containing little or no fines and uniform in size so that no more than 5% shall pass a 3/8" sieve is the preferred standard for all applications. Total depth of the pea stone shall be 8-9 inches, depending on the size of the lateral (see Figure 11 and installation procedures)

If good quality pea stone is not available, 3/4 to 1 inch clean crushed stone that is more square than flat in shape, uniform in size, non-shale or other soft stone, double washed, containing little or no fines shall substitute the pea stone.

2.1.6 BSF Installation Specifications

The proposed BSF location shall be staked out and protected prior to any site preparation activities. Over digging the sand filter hole should be avoided; minimal backfilling on base and sides provides a more stable enclosure.

2.1.6.1 Installation of BSF media

(a) BSF base: sod, vegetation, or dead or decaying organic litter or any organic soil horizon shall be removed from the area planned for the BSF installation. Once the proper design elevation for the BSF base has been reached and the enclosure is in place,

three (3) inches of the native soil material shall be scarified and thoroughly mixed with 3 inches of the sand media (see Figure 11). Perimeter stripping is prohibited. Excavation of soil beneath the established native soil / filter sand interface is prohibited unless a boulder, stone, fill, or other unexpected condition is encountered. Only approved gravel (Department Rule 32.12 or current) or BSF sand media shall be placed for backfilling the base of the BSF before placement of the required sand media.

(b) Placing sand media: all sand media placed within the BSF enclosure and below the pea stone must meet the requirements of 2.1.5.2 (a) and (b) and must be a minimum of twenty-four (24) inches deep. The excavator/backhoe bucket used to place media in the filter shall be washed thoroughly to remove any mud or fines before the loading process begins. To avoid contaminating the sand media, the cleaned bucket should not be used to backfill the exterior of the filter.

The sand media shall be placed in level eight (8) inch lifts in the filter and wetted slightly during installation to promote even settling. It is important not to wet the sand too much because particle stratification may occur.

Each lift of sand media shall be "walked down" by the installer (using foot pressure and no compaction equipment). The outside of the filter perimeter (in ground BSFs) should be backfilled evenly as lifts of sand are added to the interior to help maintain straight lines on filter edges and minimize void spaces. The installer should watch that the filter liner is not stretched during the filling process. Also, the person(s) walking inside the filter should have clean shoes to avoid contaminating sand media with construction site mud or fines.

(e) Placing pea stone: after the required amount of filter sand has been added to the filter, place (3) inches of 3/8" double washed pea stone over the filter sand. After the distribution laterals and orifice shields have been assembled atop the pea stone, 6 more inches of pea stone shall be added. The total depth of pea stone over the sand media will be eight (8) to nine (9) inches, depending on the size of lateral pipe employed (see Figure 11)

No filter fabric of any kind should be placed between the sand and overlying pea stone. However, a layer of plastic construction fencing material or broad weave, 0.25" mesh (or greater) plastic fabric may be placed over the first layer of peastone covering the laterals, before the final cover of peastone to prevent people or animals from having contact with effluent (see precautionary notes in 2.1.4 (c))

2.1.6.2 Burial and start-up precautions

BSFs shall not be buried or covered by topsoil or any other material which will limit the gas/oxygen movement into and out of the filter. Designer shall also note on their plans that the area of the BSF shall be treated as a wastewater utility as tampering with a BSF may present a public health risk. The BSF shall be accessed and serviced by trained professionals only.

Start-up precautions: if at all possible, systems should not be started up during the coldest months of the year as it may lead to water sitting in the laterals without any biological activity for a long period of time which may allow the water to freeze within the system or cool excessively causing rapid freezing at the BSF. In high ground water situations system components should be filled with the proper amount of water to prevent buoyancy

2.2 PRESSURIZED SHALLOW NARROW DRAINFIELD

2.2.1 PSND Treatment Process Summary

Wastewater, having received secondary or better treatment in advanced treatment unit(s), is intermittently pressure dosed using a programmable timer to the pressurized shallow narrow drainfield (PSND).

The PSND is comprised of trenches that are typically no more than 12" deep from finished grade and their basal area must be in the native original soil. Wastewater is dispersed over the PSND through a PVC pipe distribution network. The advanced treatment unit effluent infiltrates into the underlying native soil, where it may receive additional treatment as it percolates down through soil pore space containing air. The shallow PSND placement allows wastewater to contact the active rooting zone of grasses that may also take up wastewater and nutrients creating grass biomass and thereby reducing nutrient movement into the saturated zone.

Advanced treated effluent is dosed to a lateral that runs the length of the shallow trench. The lateral is supported by 14" long pieces of 1" SCH 40 PVC pipe spaced every 4 feet along the length of the trench. These support pipes keep the lateral from having direct contact with the infiltrative soil surface and also serve as support for a 12" diameter pipe, cut lengthwise that serves as a dome over the lateral. The short support pipes provide a bearing surface that keeps the thin edge of the dome from digging deep into the infiltrative soil surface (See Figures 15 and 16).

PSNDs have several options, including approved dome substitutions as well as proprietary technologies that are equivalent but have different configurations than that described above. Please refer to the manufacturer(s) for appropriate design and use of equivalent PSND materials.

2.2.2 Siting Guidelines for PSNDs

PSNDs are a good final dispersal option when site characteristics and space constraints are such that aesthetics is a primary concern, where low pressure pipe (LPP) or conventional trenches require filling, inverts are above existing grade, shallow water table or restrictive layers prevail, or other restrictive site conditions exist. The use of shallow narrow drainfields often will eliminate the need for excess fill required of other drainfield

options. PSNDs can be placed along contour lines, blending inconspicuously into the landscape, and providing an aesthetically acceptable appearance.

When designed and installed properly within the native A and / or upper B soil horizons, PSNDs have proven to effectively reduce coliform bacteria as well as residual nitrogen contained in effluent from nitrogen reducing technologies. PSNDs are also effective in reducing phosphorus contained in effluent when installed in upper soil horizons where there is sufficient iron, aluminum, manganese, and/or calcium on finer soil particle coatings.

PSNDs have an advantage over other drainfield options in areas with small lots, where the seasonal high water table is at least 24".

In addition, PSNDs may be used in areas where maximum removal of pathogenic organisms is desired. Applicable locations for PSNDs are: drinking water reservoir watersheds, pathogen sensitive poorly-flushed coastal ponds, shallow water table soil locations, densely populated welled areas, sites in close proximity to shell fishing grounds, and areas where recreational water contact issues are a concern. To maximize pathogen removal in these areas, PSNDs should be constructed in the Native A and/or upper B soil horizons.

2.2.3 PSND Design Guidelines

PSNDs shall also conform to Section 1.2 of this guidance: "Common design parameters for all pressurized drainfields".

(a) Vertical separation distances: all vertical separation distances defined in the Department's Rules must be met when using a PSND. The vertical separation distance shall be measured from the base of the PSND (the natural receiving soil surface), to the SHWT or to impervious layer. The bottom of each lateral must be kept level.

The required separation distance to the SHWT shall be 24" statewide; the required separation distance to any impervious material shall be 48" statewide unless otherwise specified by permit.

(b) Trench spacing**:** the minimum trench spacing shall be two and one-half (2.5) feet on-center (one and one-half (1.5) feet edge-to-edge).

(c) Shape and geometry: PSND laterals shall be placed lengthwise along the existing site contours. Laterals can be broken into zones of different shapes, so long as the total basal area of each shape (zone) is the same as the other zones.

(d) Stepped trenches: individual trenches can be stepped parallel to the original contours.

(e) Finished grade: finished grade of any PSND should be a minimum 8 inches and a

maximum of 12 inches above the elevation of its infiltrative surface (Figures 15 and 16). Finished grade shall prevent surface water ponding and prevent surface runoff over the PSND area.

(f) Fill perimeter: the land surface elevation of the infiltrative surface of each trench shall be maintained for a distance of 5 feet from the edge of the PSND. Land surface re-grading adjoining this 5-foot perimeter must maintain a minimum of 3:1 (run:rise) slope down gradient for at least 25 feet before meeting existing grade.

(g) Soil between trenches: preservation of the native soil between trenches and minimizing its disruption and compaction during construction is essential to maintaining soil structure and therefore water and gas movement in the soil around the trenches. For this reason construction is to be trench-by-trench (relief from this requirement may be granted by the RIDEM on a case-by-case basis when informed of unanticipated site conditions encountered during construction). Excavation equipment with minimal pressure impact (i.e.: mini excavators) shall be used when constructing PSNDs.

2.2.4 Additional Components of the PSND

PSNDs shall also conform to the components in Section 1.3 of this guidance: "Common components for all pressurized drainfields".

2.2.4.1 Distribution Manifolds and Laterals

(a) PSND distribution manifolds: typically are 1.25 to 2 inch in diameter and the distribution laterals are usually 1 to 1.25 inch in diameter. Size will vary depending on design and site conditions. (Note: Small lateral and orifice diameters are recommended to provide the highest possible scouring velocity in the laterals, to minimize orifice clogging, and to provide as even distribution of effluent as possible.)

(b) Orifices: a series of 1/8 inch diameter holes (orifices) shall be made in the top of the distribution laterals (12 o'clock position) and spaced according to the dosing requirements of the system. **Every fifth orifice along the lateral** shall be drilled from the bottom of the pipe (6 o'clock positions and eliminating the up-facing orifice in that location) to allow drainage after a dose and to prevent lateral freezing in cold weather. During construction/fabrication a new drill bit should be used to assure as smooth an orifice as possible.

Generally, the orifice spacing is every 18 to 24 inches to best distribute wastewater to the PSND surface. Orifice shields are not used with dome type trench covers, however, they may be used with approved mat type proprietary PSND products. In these instances, orifice orientation may be entirely in the 6 o'clock position and cold weather orifice shields shall be used to facilitate drainage after doses.

(c) Lateral clean outs: SCH 40 PVC or equivalent sweep elbows (also called "turnups") shall be attached to the distal end of each PSND lateral to facilitate maintenance and inspection (Figure 16). **A standard ninety (90) degree elbow shall not be used here because it will interfere with maintenance activities.** The sweep elbow end should be closed off with either a ball valve or a male threaded adapter and threaded cap. The threaded end should accommodate attachment of a residual head measuring device. The sweep end is also the location through which lateral cleaning will occur (see 4.0 "Operation and maintenance requirements for all pressurized drainfields").

(d) Lateral access ports: the ends of the sweep elbows shall be readily accessible by means of a 6 to 8 inch diameter access box or port brought to finish grade (Figures 15 and 16). Access ports should also be placed every twenty feet maximum along the drainfield trenches as observation ports but no more than 2 access port (in total) are required for a lateral (halfway along the length and the clean out). High-density plastic irrigation valve access boxes/ports are often used for this purpose.

2.2.4.2 Drainfield Cover

The dome-like covering over the PSND should be made of 12 inch diameter PVC plastic irrigation pipe (PIP), or high-density polyethylene (HDPE) pipe cut lengthwise or ADS N-12 IB ST or an approved equivalent (see Figures 15 and 16). Support bars (see 2.2.5 PSND Installation Specifications) shall be used along the trench to provide a larger bearing surface that keeps the thin edge of the dome from digging deep into the infiltrative soil surface

2.2.4.3 Trench Maximum Length

Maximum trench length shall not exceed fifty (50) feet. Actual lengths will vary between locations and will be influenced by site conditions and the need to maintain the required minimum two foot of distal head pressure on drainfield laterals.

2.2.5 PSND Installation Specifications

The proposed PSND location shall be staked out and protected prior to any site preparation activities

(a) Wet soils: avoid working soils that are moist or too wet because they can easily smear and compact.

(b) Trenches: each trench base must be level. Do not over-dig the width or depth of the individual trenches; minimal backfilling on bottom and sides provides a more stable enclosure. Scarify each trench bottom before installing components. PSNDs placed in cos, vcos, gravelly or very gravelly soils shall have a leveled-off 6-inch ASTM C-33 sand layer.

Do not remove the soil between the trenches. If the presence of boulders or other obstacles make trench construction impractical, the entire leachfield area may be excavated as necessary, backfilled with ASTM C-33 sand (concrete sand) to the design elevation of the bottom bed, the PSND constructed and backfilled with native soil material. **Prior approval by the Department and notification of the designer of record is required in order to remove material between or under trenches.**

(c) Support bars: one (1) inch diameter x 14 inch long Schedule 40 PVC support pipes should be used to support the dome (and pressure pipe), to act as a spreader device and to provide a greater bearing surface for the dome. These support/spreader pipes should be spaced approximately four (4) feet apart or whenever a drainfield cover joint occurs. Notches should be cut 1 inch from either end of the support pipes for the cover to fit into. This will help provide greater structural strength for the cover and provides a larger bearing surface that keeps the thin edge of the dome from digging deep into the infiltrative soil surface.

(d) Laterals: Laterals shall be as specified in 2.2.4.1 "Distribution manifolds and laterals" and shall be installed over the support bars.

(e) Drainfield cover: The dome-like cover should snap over the spreader bars and into the notches. A minimum of 3 inches overlap shall exist between drainfield cover joints. Filter fabric shall cover the overlap joint.

(f) Inspection/access ports and ends of trenches: shall be as specified in 2.2.4.1 "Distribution manifolds and laterals" and installed in access holes in the drainfield cover. Filter fabric should be placed over or wrapped around any inspection/access port. This will keep migration of fine soil particles into the drainfield trench to a minimum. The ends of the drainfield cover should be wrapped with filter fabric or capped with a suitable end cap.

2.2.5.1 Final Installation Steps

Grass cover: PSNDs should be kept free of debris and planted to a sod cover or seeded with grass and protected. A watering program should be in place until a healthy and sustainable grass cover is obtained.

3.0 LOW PRESSURE PIPE (LPP)

LPPs are comprised of conventional trenches or shallow chambers that use small diameter pressurized laterals with orifices for wastewater distribution. LPPs may be used with either septic tank effluent or advanced treated wastewater.

3.1 Treatment Process Summary

Wastewater, having received primary treatment in a septic tank or secondary or better

treatment obtained by advanced treatment technologies, is intermittently pressure dosed using a programmable timer to the low pressure pipe (LPP) drainfield.

The purpose of using LPP with septic tank effluent is to allow for even distribution of effluent to the basal area of a conventional leachfield. Using LPP for septic tank effluent as described below will also enable peak flow modulation and a more equal dose of wastewater over a 24-hour clock period.

Although treatment potential would be greater when using a PSND, dosing advanced treated wastewater in a LPP drainfield will evenly distribute effluent and avoid localized saturated conditions that would occur with gravity distribution. **When using approved advanced treatment units with a reduced drainfield area, low pressure pipe (LPP) may be required. See the Rules.**

Low pressure pipe (LPP) uses a leachfield as defined in the Department's Rules, (i.e.: either a dispersal trench (pipe on stone) or a shallow chamber drainfield, or alternative drainfield for use with LPP's on the Department's A/E technology list) that is timed-dosed. The use of LPP with septic tank effluent is encouraged. The use of LPP with conventional drainfields (leachfields) allows for better distribution of effluent to the basal area. Also, with the addition of a timed-dosed control panel with elapsed time meters and event counters, LPP's provides information that aids servicing and troubleshooting .

3.2 Siting guidelines for LPPs

LPPs may be used in conjunction with advanced treatment technologies in all areas where the vertical and horizontal setback requirements can be met and restrictions on the particular parcel of land can be overcome without the need of an APD (BSF or PSND).

LPPs can be incorporated in a treatment system in lieu of a conventional (gravity distribution) drainfield where improved reliability, robustness and troubleshooting capability is desired. This could be of important benefit in larger flow systems or systems that may be close to sensitive resources where the designer, installer and service provider want to minimize liabilities.

Where additional pathogenic organism and/or residual nutrient reduction is desired, an APD may be a better option.

3.3 LPP design guidelines

LPPs shall also conform to Section 1.2 of this guidance: "Common design parameters for all pressurized drainfields".

All LPP systems under this guidance shall conform to the design sizing parameters contained in the current Department's Rules for leachfields. If drainfield reduction size is sought due to using advanced treatment technology, it should conform to the approved letter from the advanced treatment technology immediately before the LPP.

(a) Wastewater quality: when using LPPs with advanced treated wastewater, the pretreatment must meet the requirements for either Category 1 or Category 2 technologies.

When using LPPs with residential septic tank effluent, the quality of the effluent shall conform to BOD5 less than or equal to 170 mg/L, TSS less than or equal to 60 mg/L and FOG less than or equal to 25 mg/L (residential strength septic tank effluent).

(b) Vertical separation distances: all vertical separation distances defined in the Department's Rules must be met when using LPP. The vertical separation distance shall be measured from the base of the LPP (the natural receiving soil surface), to the SHWT or to impervious layer.

(c) Cover: the cover from the top of the LPP to the proposed grade shall be from six inches (6") to eighteen inches (18").

All LPPs shall be timed-dosed, either by the timed-dosed technology preceding it (i.e. Category 1 technology) or by incorporating a timed-dosed component as specified in Section 1.3 of these guidelines.

(d) Flow differential between first and last orifice in the laterals: the maximum head differential between the first and last orifice on each lateral shall be no greater than 15%.

(e) Pump events per day and maximum dose per LPP orifice: The number of dose events per day shall be between 12 and 24. The maximum dose per LPP orifice shall be 0.50 gallons. Pump manufacturers will usually help provide pump calculations to assist with this design requirement.

3.4 Components of the LPP

LPPs shall also conform to other components in Section 1.3 of this guidance: "Common components for all pressurized drainfields".

(a) Transport lines, distribution manifolds and laterals: LPP transport lines and distribution manifolds typically are 1.25 to 2 inch in diameter and the distribution laterals are usually 1 to 1.25 inch in diameter. Size will vary depending on effluent type (advanced treated or septic tank effluent), design and site conditions. (Note: Small lateral and orifice diameters are recommended to provide the highest possible scouring velocity in the laterals, to minimize orifice clogging, and to provide as even distribution of wastewater as possible.)

Schedule 40 PVC or equivalent sweep elbows (also called "turnups") shall be attached to the distal end of each lateral to facilitate maintenance and inspection. **A standard ninety**

(90) degree elbow shall not be used here because it will interfere with maintenance activities. The sweep elbow may be fitted with a PVC pipe extension, of the same diameter, to reach the proposed grade and to extend from the lateral with orifices (if necessary). The sweep elbow (or extension) end should be closed off with either a ball valve or a male threaded adapter and threaded cap. The threaded end should accommodate attachment of a residual head measuring device. The sweep end is also the location through which lateral cleaning will occur (see Operation and Maintenance section).

(b) Orifice size and spacing: **for advanced treated effluent** 1/8 inch diameter (minimum) orifices shall be made in the top of the distribution laterals (12 o'clock position) and spaced according to the dosing requirements of the system. Orifice size for **use with septic tank effluent** shall be 3/16 inch diameter. Every fifth orifice along the lateral should be drilled from the bottom of the distribution laterals (at the 6 o'clock position, with no upfacing hole at that location) to allow drainage after a dose and to prevent lateral freezing in cold weather. During construction/fabrication a new drill bit should be used to assure as smooth an orifice as possible. Saw and drill filings should be flushed out the lateral clean outs to minimize orifice clogging. Generally, with septic tank effluent the orifice spacing is every 18 to 60 inches to evenly distribute wastewater to the drainfield surface.

(c) Orifice shields or sleeves for dispersal trenches (pipe on stone): orifice shields shall be used at every orifice. Cold weather orifice shields are required for the down facing orifices (6 o'clock position).

In lieu of orifice shields, the pressure lateral may be inserted into a three or four-inch (3"or 4") diameter perforated high density polyethylene HDPE corrugated slotted pipe. The sleeve shall extend to the sweep elbow and into the inspection port. If the pipe has single or double rows of perforations, the perforations shall point in a downward direction.

Orifice shields or sleeves are not required when using concrete chambers or plastic chambers. When using concrete chambers, the laterals shall be inserted in the concrete troughs. When using plastic chambers, the laterals shall be suspended from the inside top of the plastic chamber with appropriate ties and spaced, at minimum, every three (3) feet, or laid over crushed stone on the bottom of the trench before placing the chamber.

(d) Inspection port: the ends of the sweep elbows shall be readily accessible by means of a 6 to 8 inch diameter access box or port brought to the ground surface. High-density plastic irrigation valve access boxes/ports are often used for this purpose.

3.5 LPP Installation and maintenance specifications

Other than the components specific to LPP's, the trenches shall be installed and maintained in accordance with the current Department Rules or the Department approved technology equivalent replacement approval letters.

4.0 OPERATION AND MAINTENANCE REQUIREMENTS FOR ALL PRESSURIZED DRAINFIELDS

WARNING - Before doing any work on either the wiring to the level controls and pumps in the vault, tanks, dosing tanks, or on the control panel, pull the fuse and/or switch all the circuit breakers serving the control panel to the OFF position. Perform lock out / tag out procedures at the main panel box so no one engages circuits while work is being conducted. Do not enter a confined space without using proper training, equipment and following standard confined space entry safety precautions.

General Note: An O&M agreement is required to be in place for the life of the system. The first O&M agreement of the system shall be recorded in the Land Evidence records of the pertinent City/Town and is typically for a minimum 2-year period.

4.1 Alarms

(a) In the event of an audible alarm on the pumps controlling the dosing to the pressurized drainfield, the alarm may be silenced, depending on the manufacturer of the control panel. In many cases the alarm will be due to a temporary high water situation caused by too much water entering the system at a particular time. This will be self-correcting in most cases. If the alarm keeps coming on, or if the red light on the outside of the panel stays on for a prolonged period of time after the alarm is silenced, there may be a more serious problem that needs to be addressed by the system maintenance provider.

(b) The high water alarm will come on if the volume of water used at a particular time is more than what is accommodated for discharge in the usual programmed dosing process. An alarm may go on if the water use of the house or facility is more than typical. These are referred to as "nuisance alarms" and do not necessarily mean there is a system problem. If the nuisance alarms persist or are recurrent, the dosing schedule and amounts can be changed to help correct the problem. In some cases, persistent or recurrent alarms may indicate a more serious problem that needs to be addressed by the system maintenance provider.

4.2 Site Visits

At each of the operational and maintenance visits, readings from elapsed time meters, event counters, and water meters shall be recorded on the data cards (usually stored in the electrical control panel). Local jurisdictions may require reporting of these readings.

At each site visit, a sample of the **influent** to the pressurized drainfield should be collected at the dosing tank or lateral end of the pressurized drainfield. The service

provider should visually check the clarity achieved by the advanced treatment unit (if installed). If advanced treatment is used, this sample should be clear of fines and/or organic matter and be relatively free of septic odors.

4.3 Routine Periodic Maintenance

(a) Laterals - an eight (8) foot clear graduated PVC pipe shall be temporarily attached at the end of a lateral to measure residual head and compare with the pressurized drainfield start-up measurement. Increased residual head (distal head or squirt height) will signal orifice clogging and lateral cleaning must be performed. Decreased residual head might indicate pump wear, clogging or other problems in pipe(s) or screens needing service/cleaning.

To remove accumulated solids in laterals, working one lateral at a time, first open the lateral end ball valve or threaded end cap, engage the pump and flush out any solids. A bottle brush (appropriately sized for the lateral) attached to a plumbers snake is then pushed down each lateral to unplug the orifices. With the bottle brush removed, the pump should again be manually engaged and each lateral line flushed out through the lateral end onto the pea stone or valve box. (Particularly dirty or maintenance-neglected laterals should be flushed directly into a bucket by using a short garden hose and threaded fitting assembly. This waste material is then dumped into the inlet end of the system septic tank). Alternatively, a pressure power washer with appropriately sized tubing can be used in lieu of a bottle brush and plumbers snake set up.

All pressurized drainfields shall require lateral flushing / bottle brush treatment at least once a year. Pressurized drainfields operating above their daily design flow and/or receiving poorer quality effluent may require more frequent lateral flushing. This frequency can be determined upon the results of the distal lateral head pressure test.

(b) Setback to brush/trees: any brush or trees growing within ten (10) feet of the pressurized drainfield shall be removed. If any water loving trees (i.e.: black locust, willow, red maple, etc.) are located in the vicinity of the pressurized drainfield (between 10 to 30 feet), a root barrier should be installed in the ten (10) foot perimeter of the pressurized drainfield to avoid roots from entering it.

(b) Filter surface of BSFs: the pea stone surface of all BSFs should be kept free of debris, weeds, and grasses. This surface can be lightly raked to remove any leaves. Weeds and grasses should be removed when they first appear. Maintenance-neglected BSFs typically have well established weeds growing in them. Care must be taken to place weight over the laterals when pulling these weeds as their roots will likely be wrapped around laterals that are easily moved in the pea stone cover.

(c) Grass surface of PSNDs: the surface of the PSND should consist of mowed grass with no debris or imperious surface blocking the growth of grass. Any brush or saplings

should be removed and the owner advised of the requirement for grass over the surface of the PSND.

(d) Electrical components: once a year all electrical components should be checked for functionality and safety. All control switches should be activated and timers should be checked against the desired setting. (A shortened cycle can be set to check timer function, but ensure that it is reset back to original settings once the test is complete.) All control sensors / switches in the dosing tank should be hosed down to prevent scum accumulation. All wiring should be neatly bundled and placed out of the operating path of the control switches.

All splice boxes shall be checked for moisture. If moisture is encountered in any splice box, the source shall be identified, corrections made (if needed), and splice box dried and secured before leaving the site.

(e) Tank and chamber maintenance: all tanks and dosing tanks in the system treatment train should be measured for sludge and scum accumulation. This should occur every 1 to 3 years, the frequency depending on usage, occupancy, and treatment technology. More actively used systems should be placed on a more frequent sludge/scum measurement schedule. This can easily be done as part of the annual maintenance. If sludge and scum levels warrant, those tanks shall be pumped and accumulations removed. Please observe recommendations by proprietary technology vendors.

IMPORTANT! If tanks do not have anti-floatation (especially fiberglass or polyethylene tanks), it is important to monitor ground water levels before pumping septage or to schedule pumping of tanks during late Summer or early Fall to avoid tanks floating (this time period may differ depending upon weather conditions). Pumping concrete tanks during periods of high ground water may also cause tank flotation problems. Careful consideration should be paid to tanks close to tidal zones, where ground water level may fluctuate daily due to tidal influence. During periods of heavy rain, surface water can also get into the backfilled excavation of any tank and float the tank if it does not have anti-floatation. If a tank is pumped during the dry season and there is no anti-flotation measures installed, the tank must be filled with clean water before leaving the site.

(f) Effluent screens: all effluent screens should be hosed off, at minimum, on a yearly basis, and whenever the tanks are pumped. Systems operating above their design flows may require more frequent effluent screen cleaning. Clogged effluent screens will affect the dose rate of the pump, and the ability of the pressurized drainfield to function properly.

(g) Pump vault: if a hanging style pump vault is removed for servicing, the cleaned vault should be filled with clean water from a garden hose as it is being lowered back into the pump tank/compartment. This will prevent the screen from being fouled with solids in the tank and will also make it easier to submerge.

Precautionary Note: To prevent contamination of the local water supply, the service provider must use his/her own hose with a backflow preventer.

(h) Biosolids: all slime material hosed off of filters, pumps and vaults should be placed into the **inlet end of the septic/trash tank at the beginning of the treatment train**.

(i) Structural soundness/water tightness: all tanks and chambers should be visually inspected for water tightness and structural soundness when maintenance is performed.

(j) Sequencing valves: sequencing valves need, at least, to be tested for proper sequencing through all the outlets (turn pump on/off through all zones). Some sequencing valves may need to be disassembled and cleaned once a year, especially when the sequencing valve is receiving septic tank effluent.

(k) High risk systems: should be identified as they may require extra care during extreme cold conditions. All systems should be bottled brushed and laterals thoroughly cleaned prior to the onset of winter.

(l) Maintenance notes: all Designers should provide adequate notes on their plans to facilitate proper maintenance.

GLOSSARY

Advanced treatment unit: An innovative and experimental treatment system that has been approved to reduce the BOD and TSS by at least 30/30 mg/L.

Basal area: The horizontal surface in an APD or LPP designed to receive effluent.

Biochemical oxygen demand - five day (BOD_5): A five day laboratory test which determines the amount of dissolved oxygen used by microorganisms in the biochemical oxidation (breakdown) of organic matter. BOD concentrations are used as a measure of the strength of a wastewater.

Bottomless sand filter: A timed-dosed sand filter used specifically as a dispersal / drainfield option for pretreated effluent which at least meets the BOD_5 and TSS requirements of 30 mg/l, and FOG of 5 mg/l. The filter is intermittently pressure dosed with the effluent followed by periods of drying and oxygenation of the filter bed. Wastewater applied to the surface of a bottomless sand filter flows through that filter media once before infiltrating to the underlying native soils.

Conventional leachfield: A soil treatment area as defined in the RIDEM/OWTS current Rules.

Dosing tank: A tank that collects wastewater and from which wastewater is discharged it into another treatment or dispersal step; equivalent to a dosing chamber.

Drainfield: A soil treatment area.

Distribution laterals (pressure dosed): Usually small diameter PVC pipe with orifices evenly spaced, used to uniformly distribute wastewater over a treatment zone in an enclosed component or drainfield.

Effective (particle) size, (E.S.= D_{10}): The size of a sand filter media grain in millimeters, such that 10% by weight of the media sample is smaller.

Effluent: Liquid that is discharged from a septic tank, filter, or other onsite wastewater system component.

FOG: Fat, oil, and grease contained in wastewater.

Fecal coliform (bacteria): Coliform bacteria specifically originating from the intestines of warm-blooded animals, used as an indicator of pathogenic bacterial contamination.

Filter: A device or structure for removing suspended solid, colloidal material, or BOD from wastewater.

Filter fabric: Any man-made permeable textile material used with foundations, soil, rock, or earth.

Filter media: The material through which wastewater is passed for the purpose of treatment.

Influent: Wastewater being applied to a treatment unit or to a drainfield.

Leachfield (from RIDEM/OWTS Rules, 2012): means a group of one (1) or more dispersal chambers or trenches designed for the final treatment and dispersal of wastewater into the underlying soil. The leachfield shall be held to mean the horizontal and vertical lines circumscribing the outermost edges including the area between the chambers or trenches and the depth to the bottom of stone.

Low Pressure Pipe (LPP) (from CIDWT, 2009): 1. Application of effluent over an infiltrative surface via pressurized orifices and associated devices and parts (including pump, filters, controls, and piping). 2. Distribution via a network of small diameter laterals (typically 1 ¼-inch) with small orifices (typically 1/8- to 3/16-inch) installed in a soil treatment area; also called low-pressure-pipe (LPP) distribution.

Particle size: The diameter (in millimeters) of a soil or sand particle, usually measured by sedimentation or sieving methods.

Particle stratification: Separation of particles according to size due to movement of particles in either air or water.

Reduced area drainfield: A conventional drainfield (trench or shallow chamber) that is paired with an advanced treatment unit(s) that have been granted a reduction in size with the corresponding RIDEM approval letter.

Soil texture: The relative proportions of soil separates (sand, silt, and clay particles) in a particular soil. (Note: USDA soil texture abbreviations illustrated in Table 1 are defined as: cos = coarse sand; fs = fine sand; lfs = loamy fine sand; ls = loamy sand; fsl = fine sandy loam; sl = sandy loam; l= loam; vfs = very fine sand; lvfs = loamy very fine sand; vfsl = very fine sandy loam; sil = silt loam; vfsl = very fine sandy loam; si = silt; sicl = silty clay loam.)

Total suspended solids (TSS): The measure of solids that either float on the surface of, or are in suspension in, water or wastewater. A measure of wastewater strength, often used in conjunction with BOD_5.

Uniformity coefficient (U.C.): A numeric quantity which is calculated by dividing the size of a sieve opening which will pass 60% by weight of a sand media sample by the size of the sieve opening which will pass 10% by weight of the same sand media sample. Note that 50% of the sample is retained between the two. The uniformity coefficient is a measure of the degree of size uniformity of the sand particles in a sand media sample. As the U.C. value approaches one (1), the more uniform in particle size the sand media is. The larger the U.C., the less uniform the particle size.

$$UC = \frac{\text{Particle Diameter}_{60\%}}{\text{Particle Diameter}_{10\%}} = \frac{D_{60}}{D_{10}}$$

Wastewater: Water-carried human excreta and/or domestic waste from residences, buildings, industrial establishments or other facilities.

ACKNOWLEDGEMENTS

TO BE INSERTED IN TIME FOR SECOND REVIEW

REFERENCE MATERIALS

Deschutes County Community Development Department Environmental Health Division. The Bottomless Sand Filter. Bend, Oregon: Deschutes County Community Development Department, 1999.

Oregon Department of Environmental Quality. Oregon Administrative Rules: On-Site Sewage Disposal (OAR Ch 340, Div 071). Salem, Oregon: Oregon State Archives, 2001.

Clackamas County Soils Department. Sand Filter Document. Clackamas, Oregon, 1995.

Washington State Department of Health. Sand Line Trench Systems: Recommended Standards and Guidance for Performance, Application, Design, and Operation and Maintenance. Olympia, Washington: State of Washington, 1999.

Stinson Beach County Water District. Onsite Wastewater Management Code: Design Standards: Repair System – Bottomless Sand Filter (Ch. 4.25) Stinson Beach, California: 2000.

Mark Adams. Operation and Maintenance. Designers Requirements for Proper Operation and Maintenance of Bottomless Sand Filters. North Star Engineering. Chico, California, 2000.

North Carolina Department of Health and Human Services. Environmental Health Services Section. "Recommended Design Considerations for Preventing Common LPP Problems". http://ehs.ncpublichealth.com/osww_new/new1/ images/LPP_Design_Considerations.pdf

North Carolina Department of Health and Human Services. Environmental Health Services Section. "15A NCAC 18A .1957 Design criteria for design of alternative sewage systems". http://www.deh.enr.state.nc.us/osww_new/new1/ images/rules/1957.pdf

Rhode Island Department of Environmental Management. Guidelines for the Design and Use of Sand Filters and Pressurized Shallow-Narrow Drainfields. April 2000, revised March 2010

Rhode Island Department of Environmental Management. Guidelines for the Design and Use of Bottomless Sand Filters. November 2001

Rhode Island Department of Environmental Management. Advisory Concerning BSF Design and Installation Procedures in Cold Weather Related Design Adjustments and Precautions. April 30, 2004

Rhode Island Department of Environmental Management. Rules Establishing Minimum Standards Relating to Location, Design, Construction and Maintenance of Onsite Wastewater Treatment Systems. July 9, 2012

The Consortium of Institutes for Decentralized Wastewater Treatment (CIDWT). Decentralized Wastewater Glossary, Second Edition. 2009. http://www.onsiteconsortium.org/Glossary2009.pdf

APPENDIX

PRESSURIZED DRAINFIELD FIGURES 1-16

LPP figure(s) to be included in final document

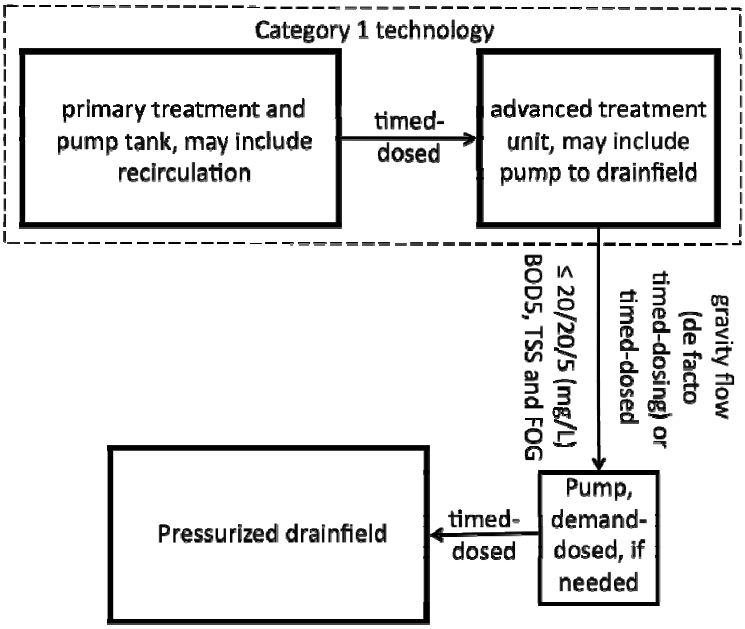

FIGURE 1: CATEGORY 1 TECHNOLOGY AND PRESSURIZED DRAINFIELD SCHEMATIC

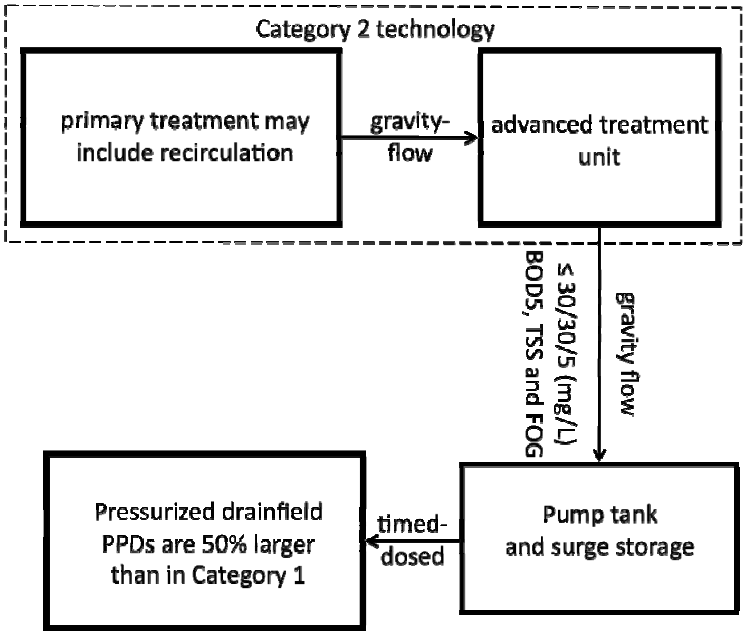

FIGURE 2: CATEGORY 2 TECHNOLOGY AND PRESSURIZED DRAINFIELD SCHEMATIC

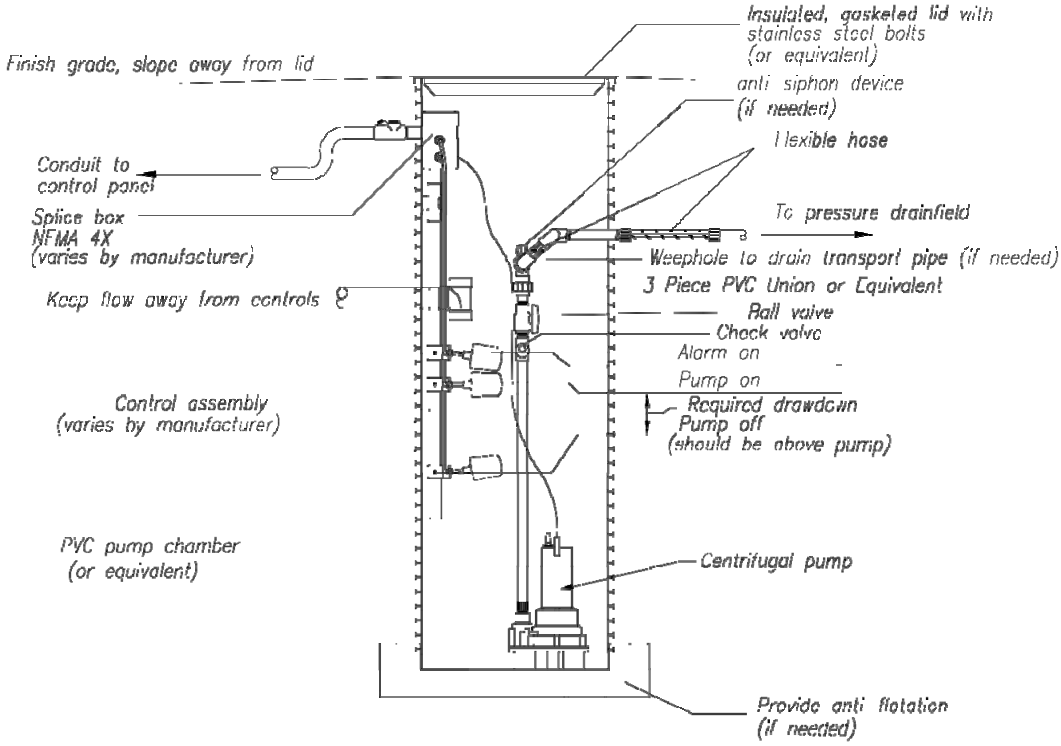

FIGURE 3: DEMAND DOSING TANK W/ CENTRIFUGAL PUMP

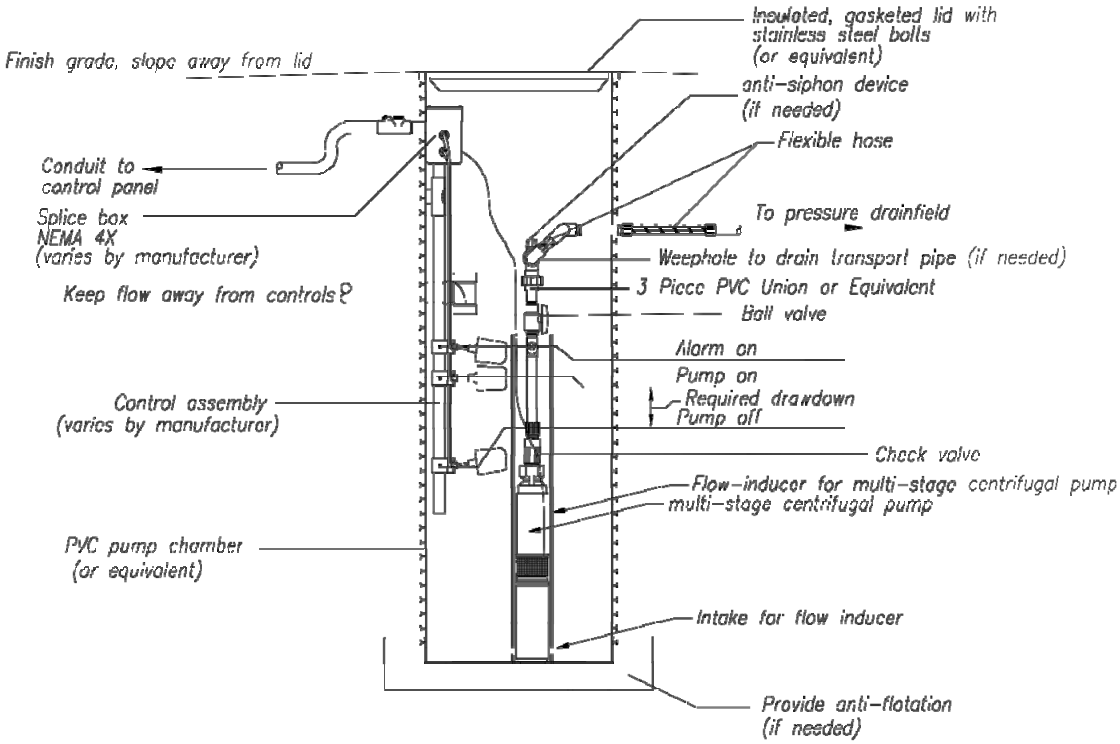

FIGURE 4: DEMAND DOSING TANK W/ MULTI-STAGE CENTRIFUGAL PUMP

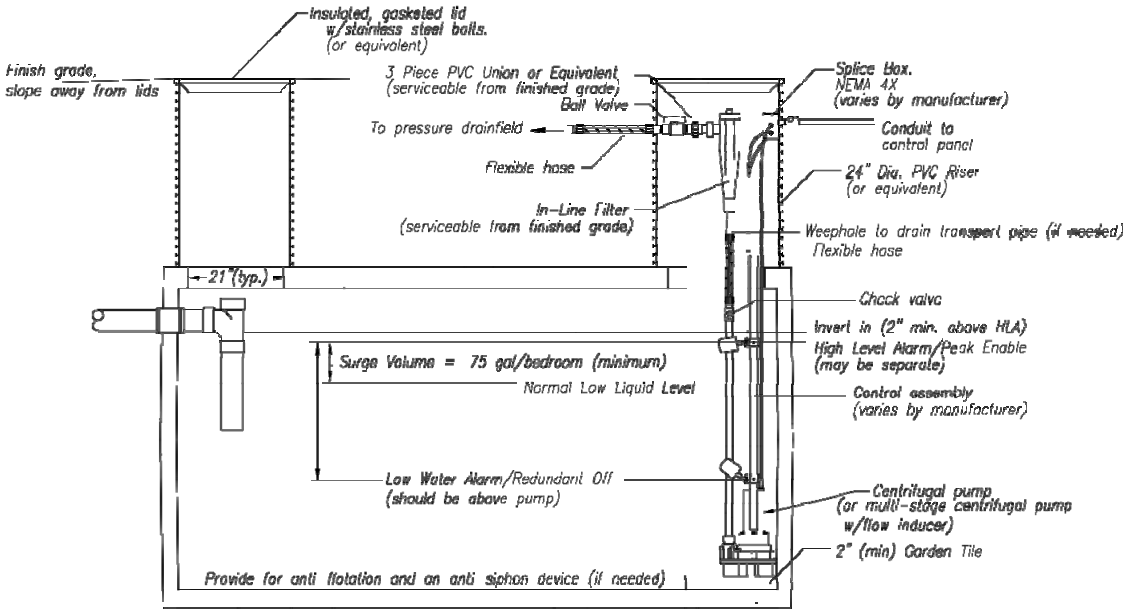

FIGURE 5: TIMED-DOSING TANK W/CENTRIFUGAL PUMP AND IN-LINE SCREEN

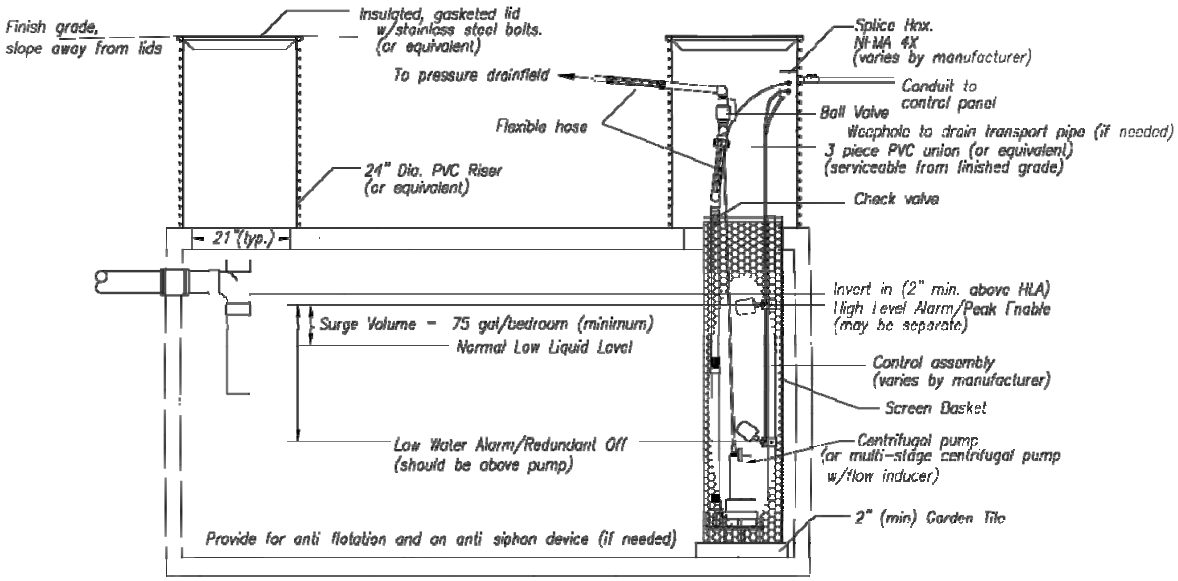

FIGURE 6: TIMED-DOSING TANK W/CENTRIFUGAL PUMP AND BASKET SCREEN

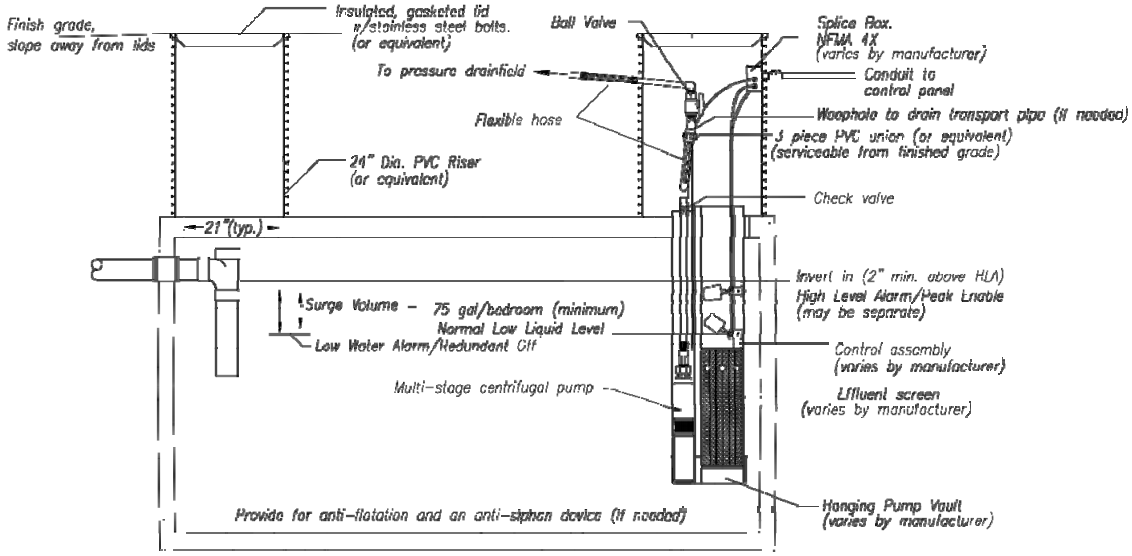

FIGURE 7: TIMED-DOSING TANK W/SCREENED VAULT AND MULTI-STAGE CENTRIFUGAL PUMP

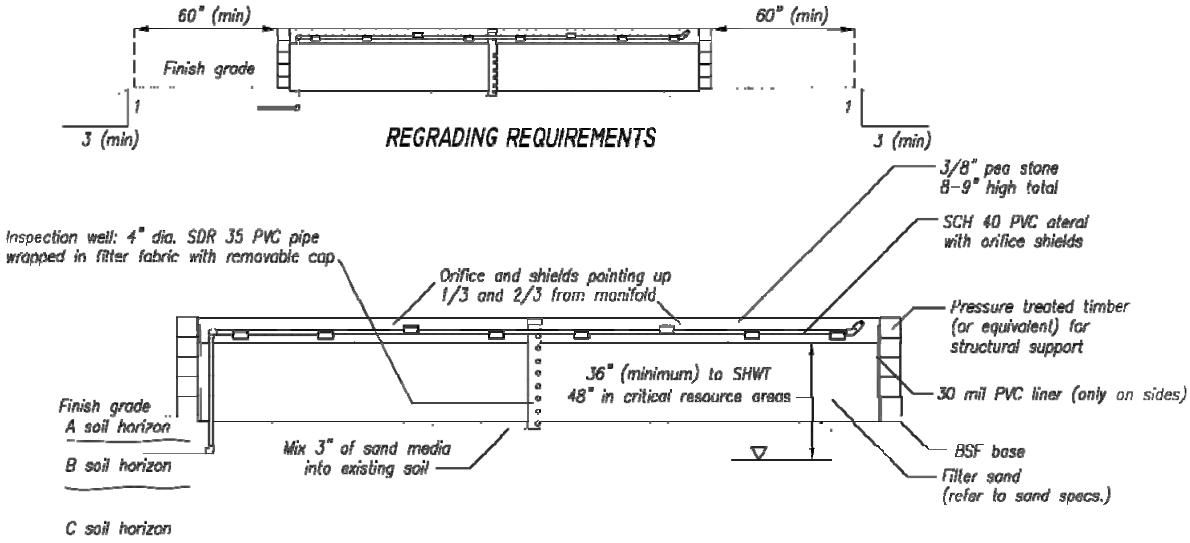

FIGURE 8: ABOVE-GROUND BOTTOMLESS SAND FILTER (SIDE VIEW)

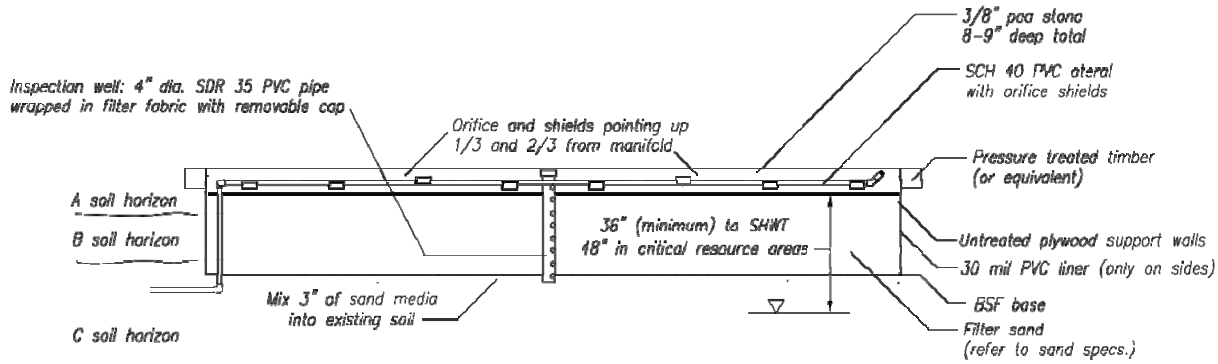

FIGURE 9: IN-GROUND BOTTOMLESS SAND FILTER (SIDE VIEW)

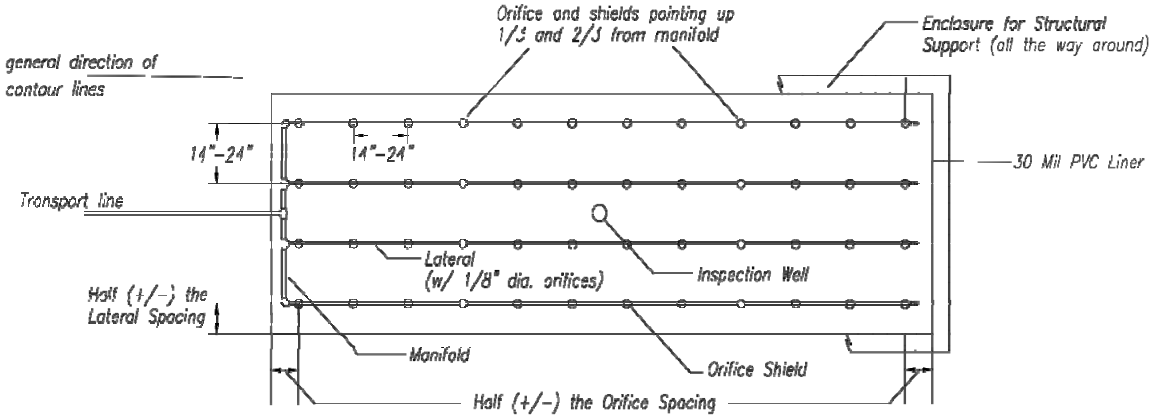

FIGURE 10: TYPICAL BOTTOMLESS SAND FILTER (TOP VIEW)

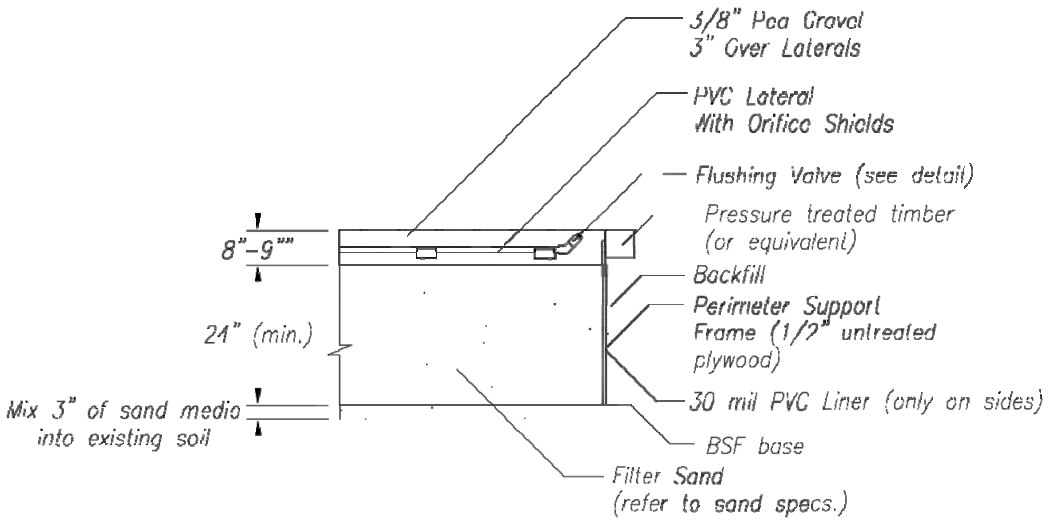

FIGURE 11: SIDE VIEW DETAIL – TYPICAL BOTTOMLESS SAND FILTER

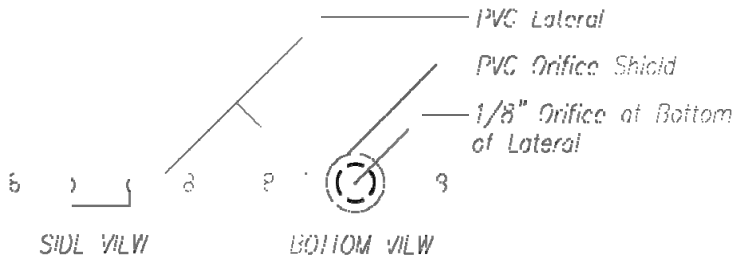

FIGURE 12: ORIFICE SHIELD DETAIL
Note: Shields shall be able to drain. Shield and orifice shall be on top of lateral 1/3 and 2/3 from manifold end. Details vary from manufacturer.

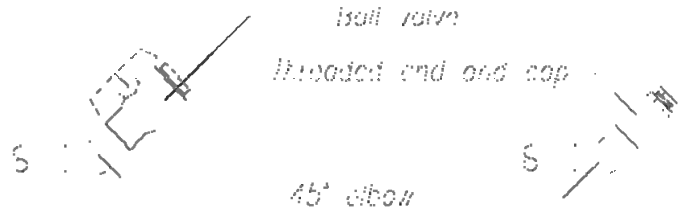

FIGURE 13: BSF FLUSHING VALVE CHOICE DETAIL

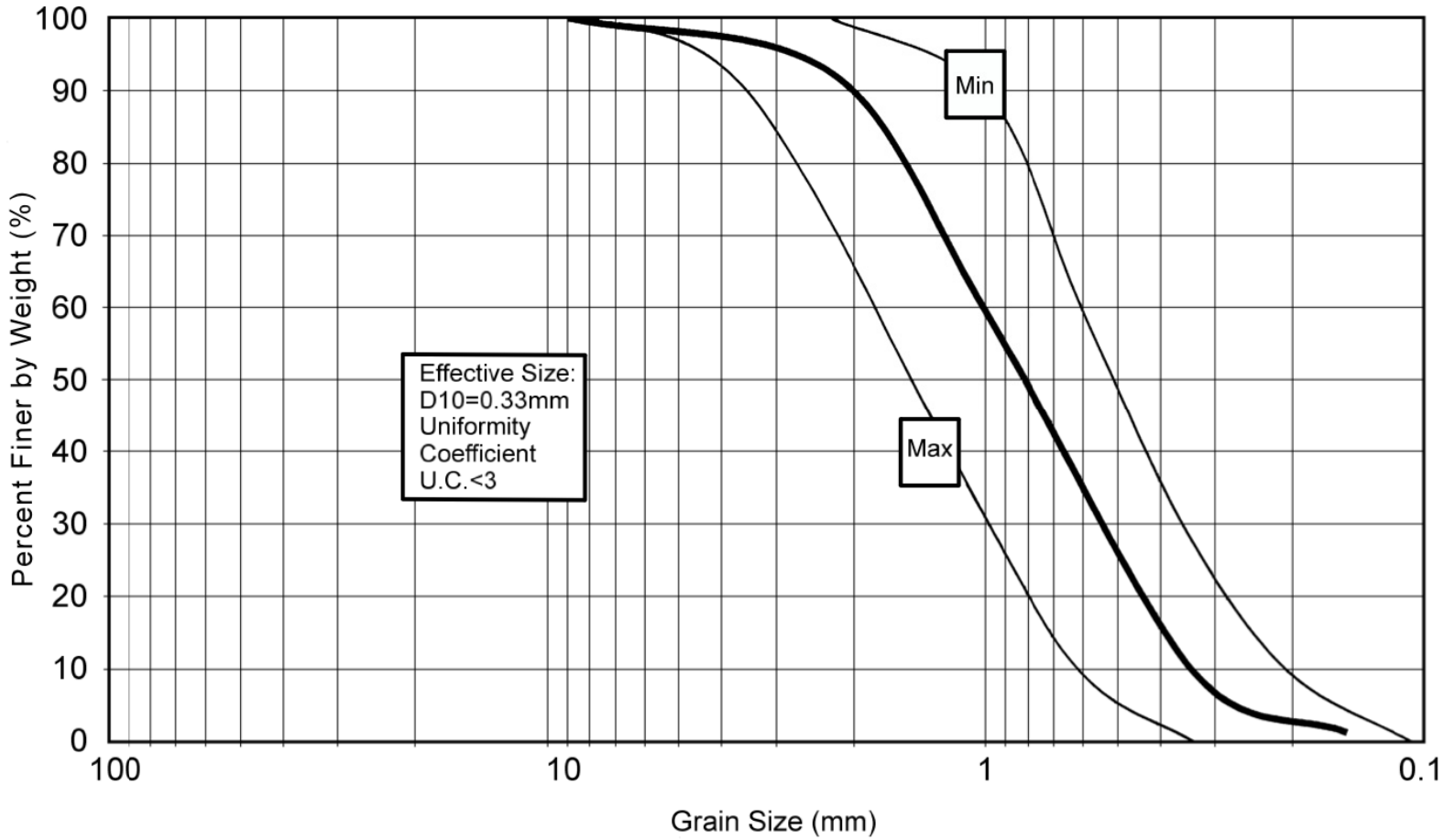

FIGURE 14: BSF SAND MEDIA SPECIFICATIONS

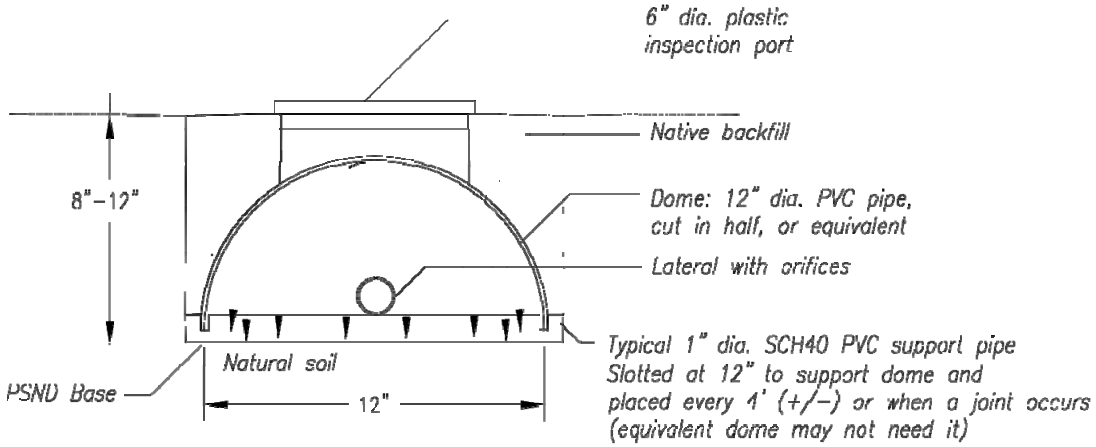

FIGURE 15: PSND CROSS SECTION DETAIL

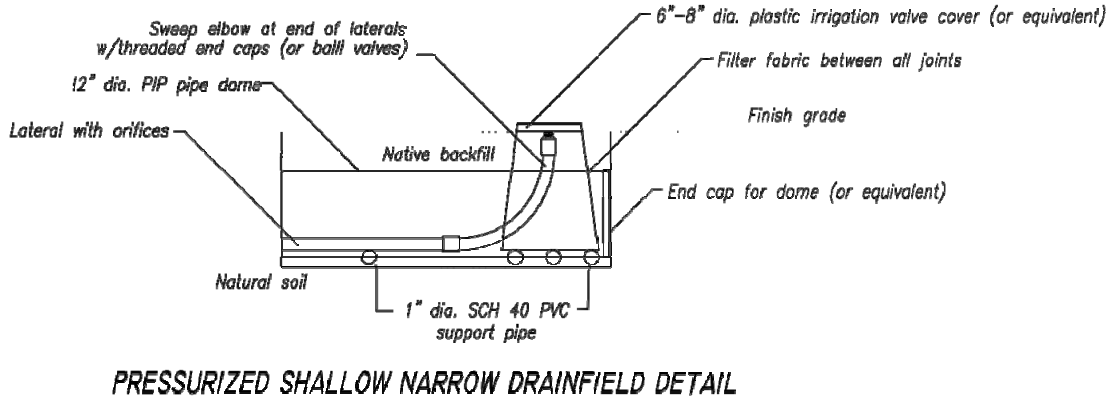

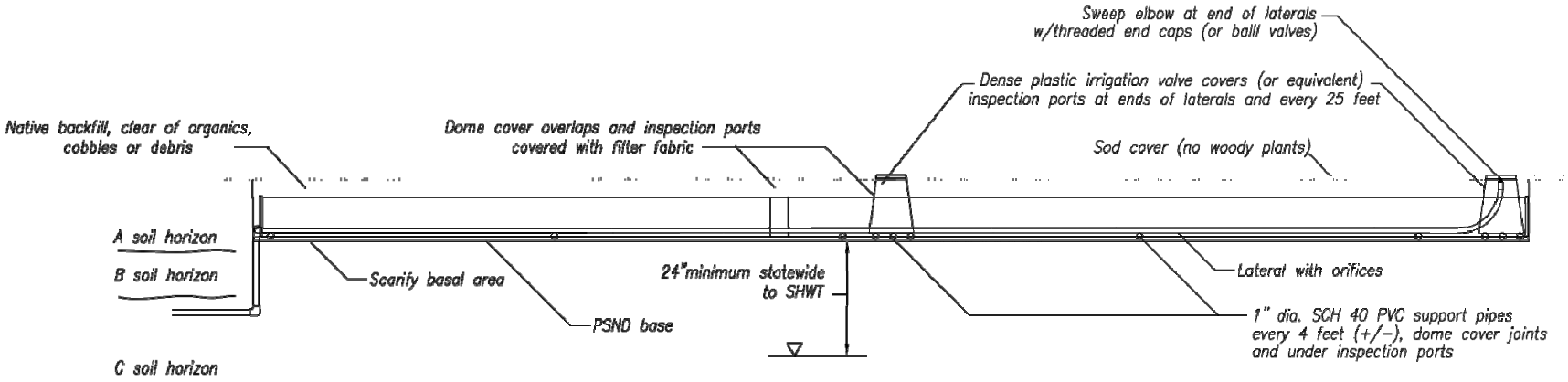

FIGURE 16: PSND CROSS SECTION DETAIL (LONG SIDE) WITH DETAIL